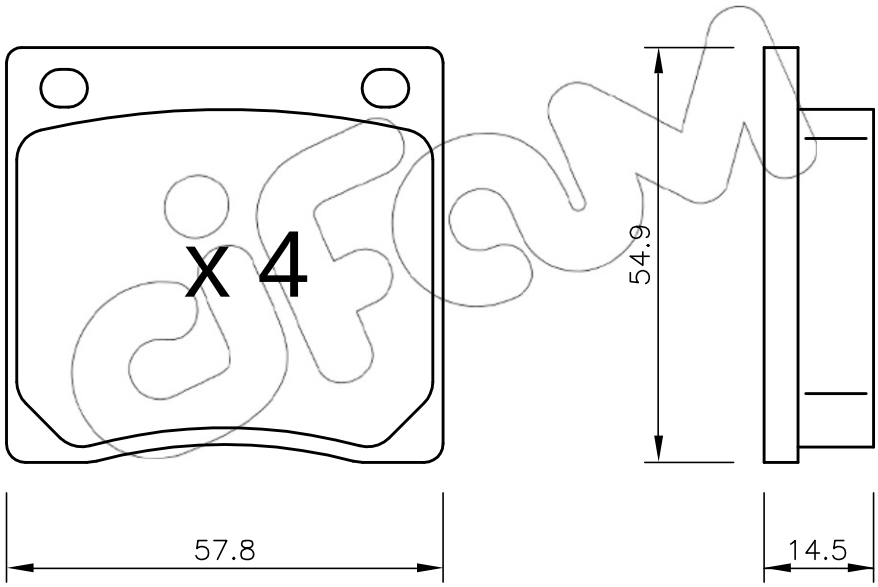
x 4
54.9
57.8
14.5