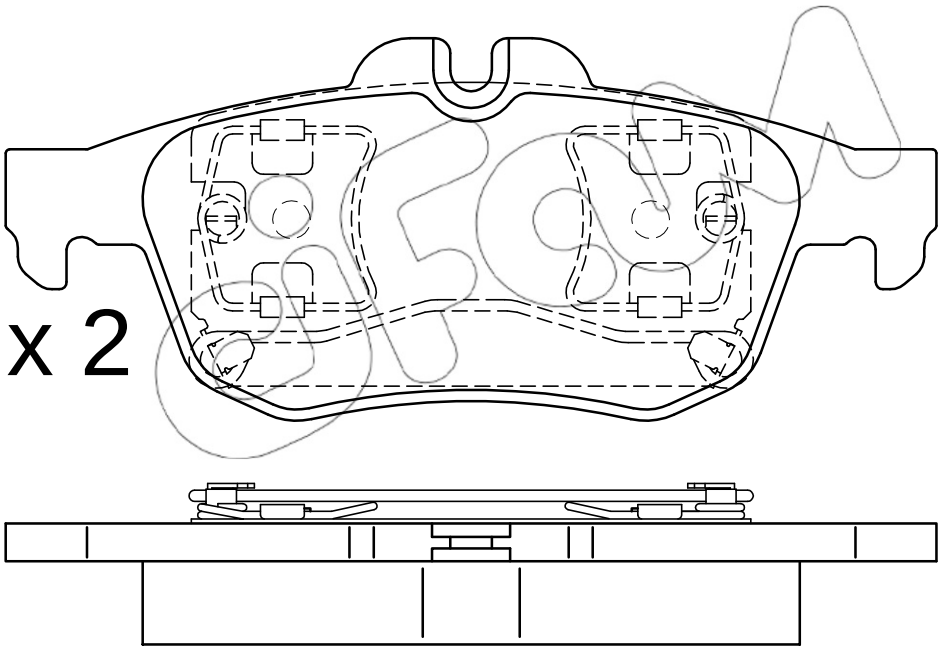
x 2

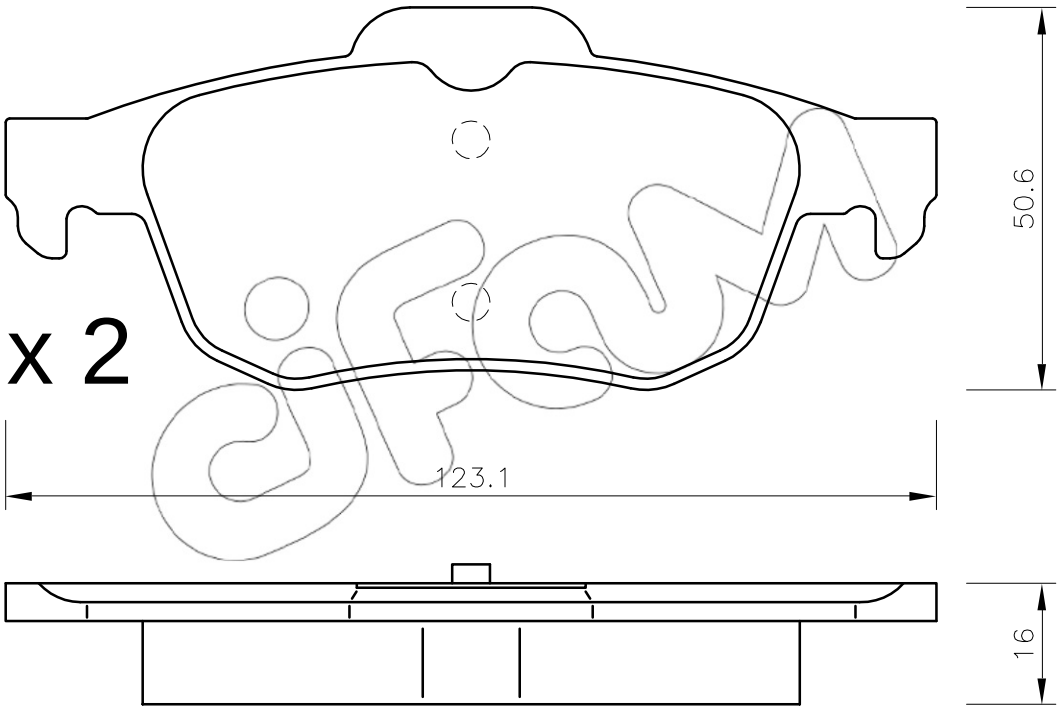
x 2
50.6
123.1
16