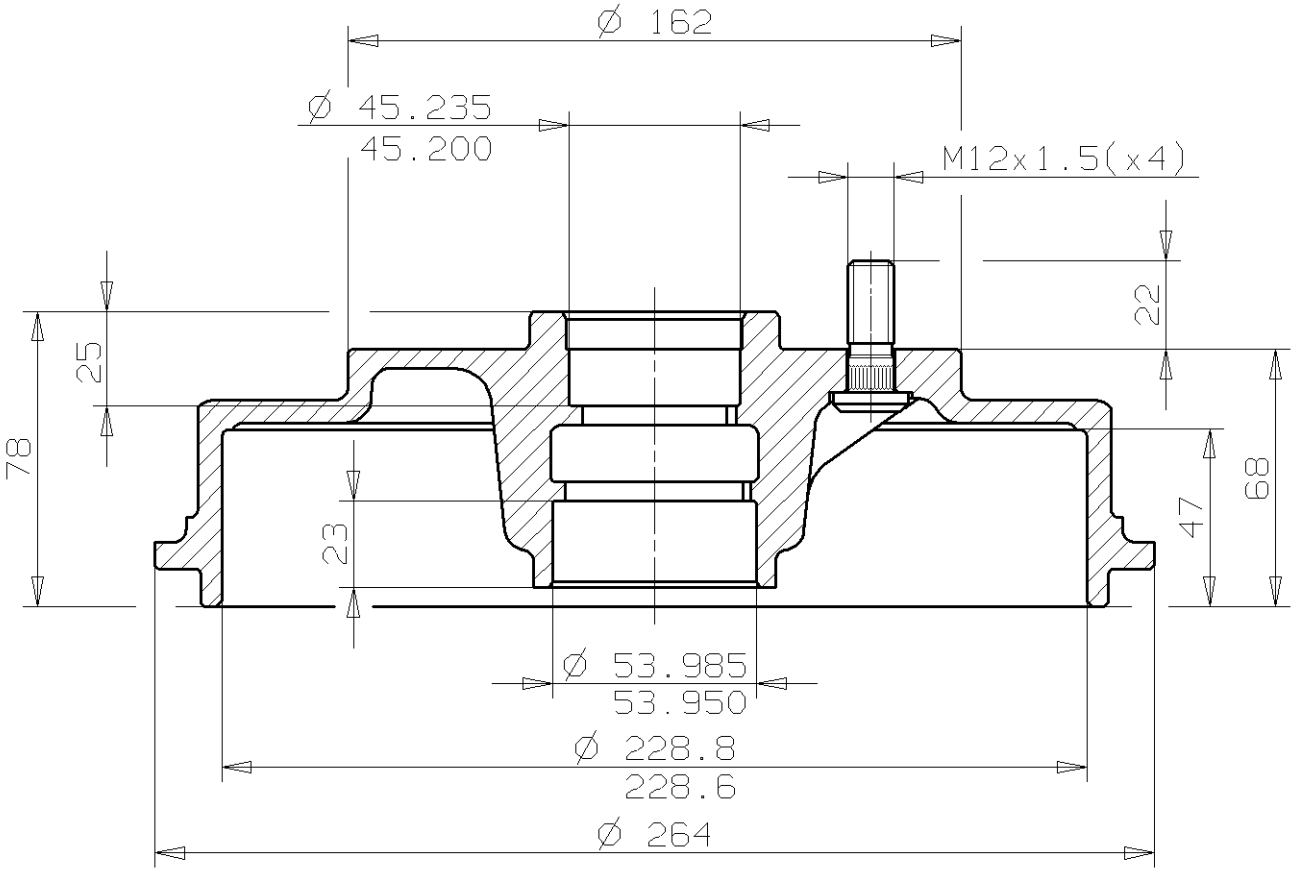

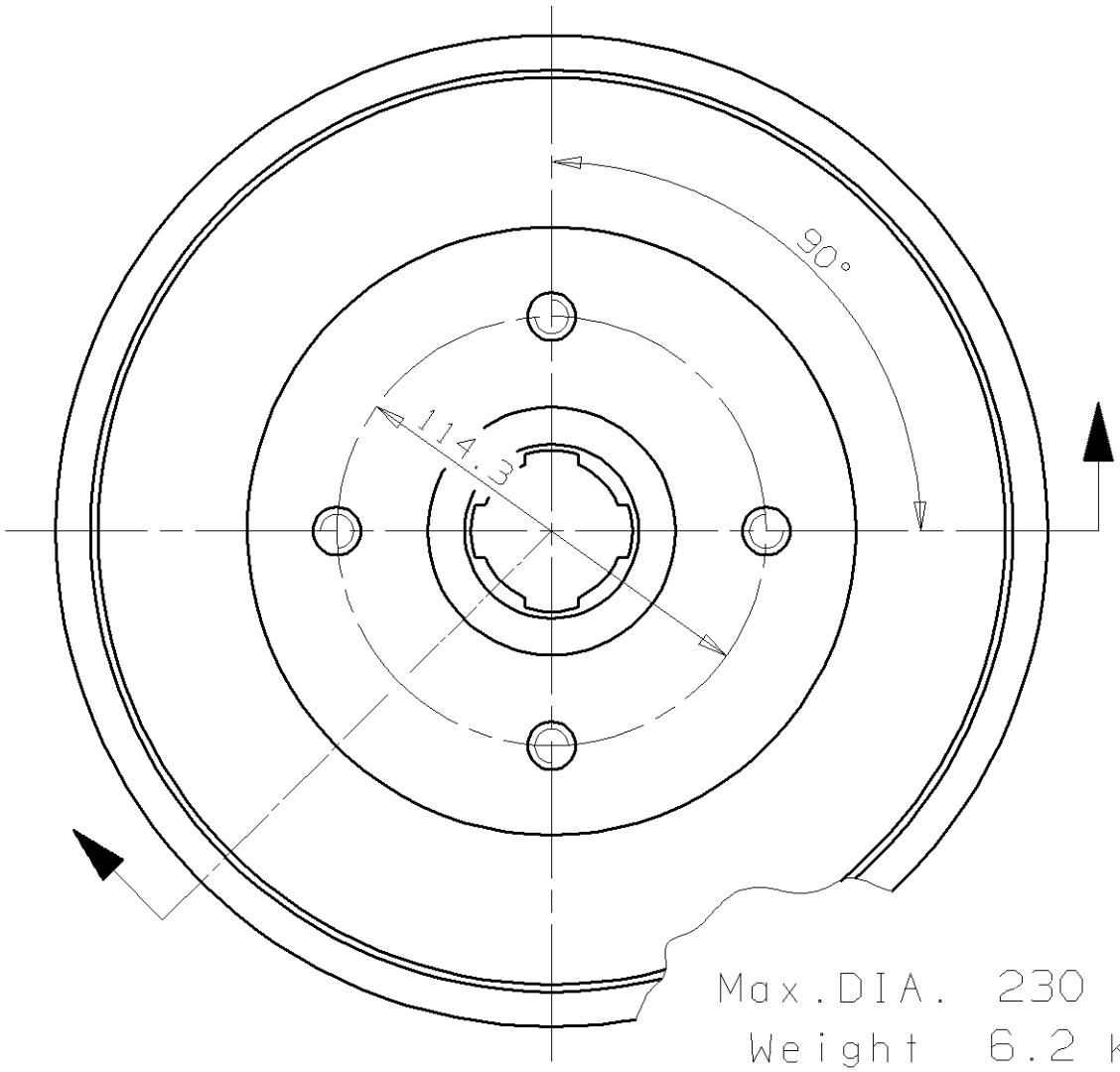

Max.DIA. 230 mm
Weight 6.2 Kg