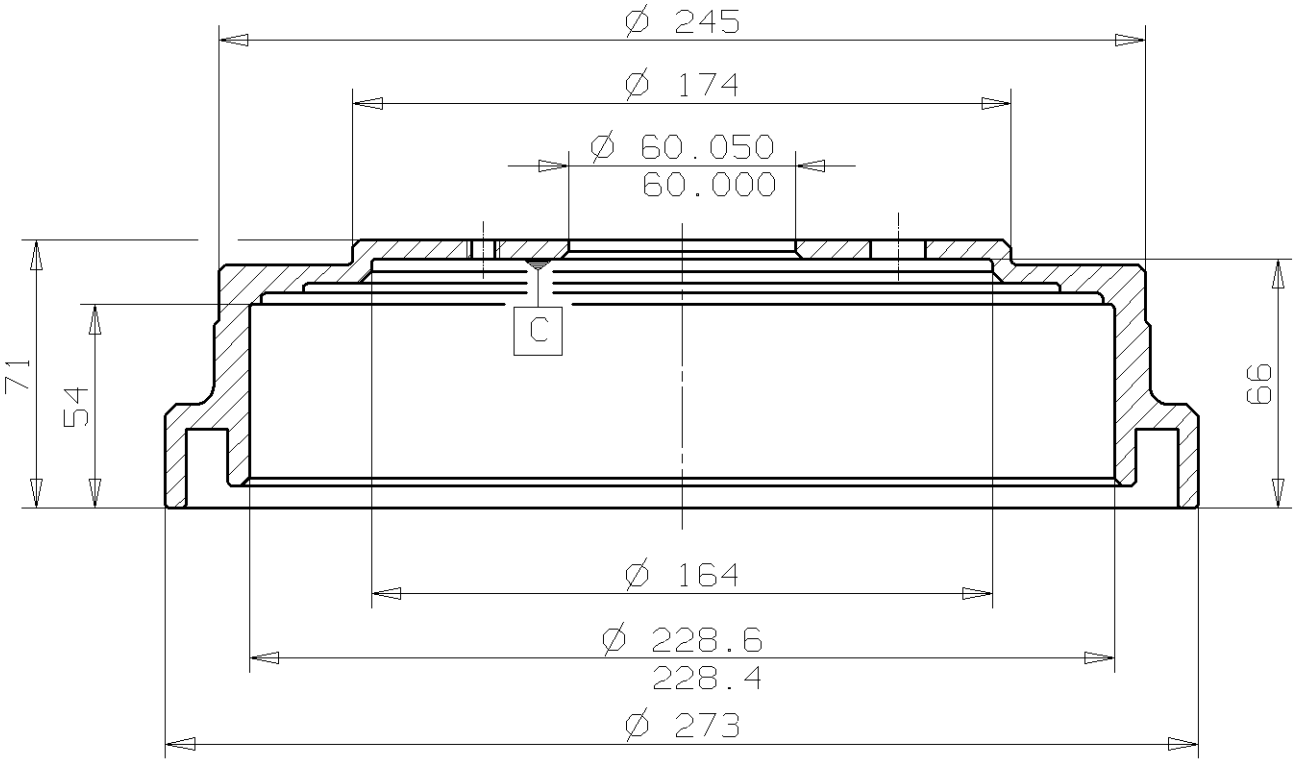


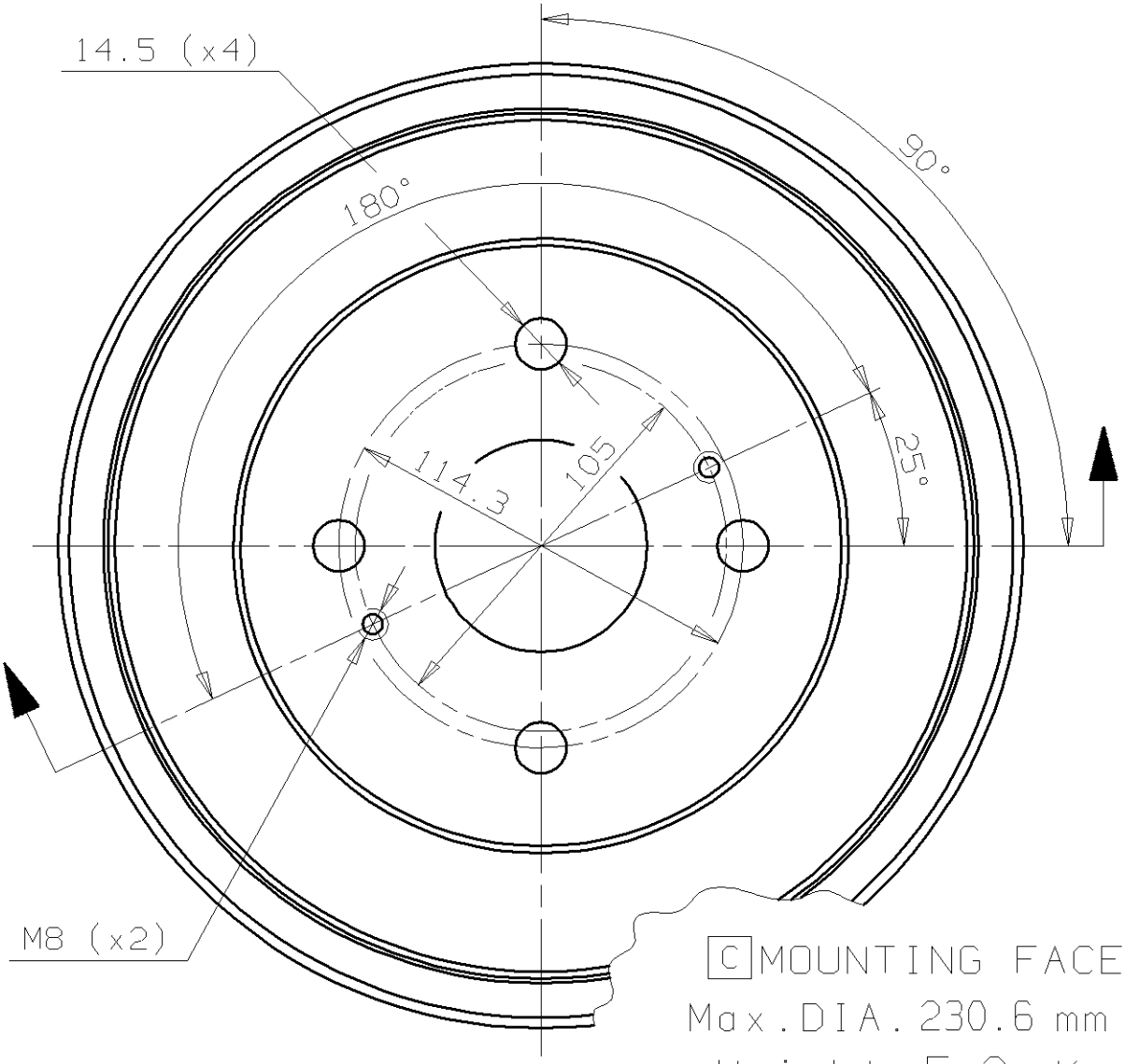


C MOUNTING FACE

Max. DIA. 230.6 mm

Weight 5.2 Kg